MCA 100 BIO

*MULTICOMPONENT ANALYZER FOR **BioGas***

- Analysis of O_2, CO_2, CH_4, H_2S, H_2, NH_3
- NDIR technology for CO_2 and CH_4
- Automatic air purge for long life H_2S cell
- Arm Processor
- Touch Screen monitor
- Ethernet and USB Remonting
- Analog & Digital Signal Output
- Low cost ownership
- 19 " Rack mounting or Wall mounting version
- Modbus, Profibus, Ethernet (optional)
- Autozero
- Data downloadable on SD Card

The **MCA 100 Bio series** of gas analyzers by ETG it's the ideal solution for biogas measurement and industrial combustion applications because of their accuracy, stability, reliability, broad measurement range, and the variety of available form factors. Unlike other analyzers, ETG MCA 100 non□dispersive infrared (NDIR) gas analyzers measure multiple gases in an instrument with a single optical path platform.

Single□gas analyzers are inadequate when using methane as a biofuel because the gas often contains large amounts of CO as a contaminant. ETG analyzers have the ability to measure CO_2, CO, and O_2 in addition to methane and therefore provide the optimal combination of gases for combustion optimization.

The enhanced optics and electronics of our NDIR analyzers have virtually eliminated zero drift after the initial warm up period. The temperature and pressure compensation eliminates the major causes of span drift in many NDIR instruments.

MCA 100 BIO *MULTICOMPONENT ANALYZER FOR **BIOGAS***

Measurement Method	Gas	Resolution	Range	Accuracy	Precision	Time
NDIR (Non-Dispersive Infrared)	**Methane (CH_4)**	0.01%	0-100% 201ppm-40% 40-80% 80-100%	+/- 1% F.S. +/- 1% rel +/- 1% rel +/- 1% rel	+/- 0.8%	T_{90} & T_{10} <10 seconds
NDIR (Non-Dispersive Infrared)	**Carbon Dioxide (CO_2)**	0.01%	0-50/0-100% 0.00-16.00% 16.01-20.00%	+/- 0.8 F.S. +/- 0.3% abs or +/- 1.0% rel +/- 1% rel	+/- 0.7% +/- 0.1% abs or +/- 0.8% rel	T_{90} & T_{10} <10 seconds
Electrochemical sensor	**Oxygen (O_2)**	0.01%	1.01-25.00%	+/- 0.1% abs or +/- 1.0% rel	+/- 0.1% abs or +/- 1.0% rel	< 40 seconds from ambient to 0.15 O_2
Electrochemical sensor	**Hydrogen Sulfide (H_2S)**	1 ppm	0-500 ppm 0-2,000 ppm 0-5,000 ppm 0-10,000 ppm	+/- 5 ppm abs or +/- 1.8% rel	+/- 5 ppm abs or +/- 3.0% rel	T_{90} & T_{10} <20 seconds
* Red Text : Optional measurement gas						
Electrochemical sensor	**Ammonia (NH_3)**	1 ppm	CR 0-1,000 ppm CR 0-10,000 ppm CR 0-200 ppm CR 0-50 ppm CR 0-5,000 ppm	short response time short response time highly sensitive highly sensitive short response time		
Electrochemical sensor	**Hydrogen (H_2)**	1 ppm	C 0-2,000 ppm C 0-20,000 ppm C 0-40,000 ppm C 0-5,000 ppm CA 0-1,000 ppm CB 0-1,000 ppm CT 0-10,000 ppm CT 0-40,000 ppm	highly sensitive highly selective more gastight at high humidity at high humidity		
Thermoconductivity	**Hydrogen (H_2)**	0.01%	0-10 % 0-20 % 0-50 % 0-100 %	+/- 0.5% abs or +/- 1.0% rel	+/- 0.5 abs or +/- 1.0% rel	T_{90} & T_{10} <20 seconds

SOFTWARE

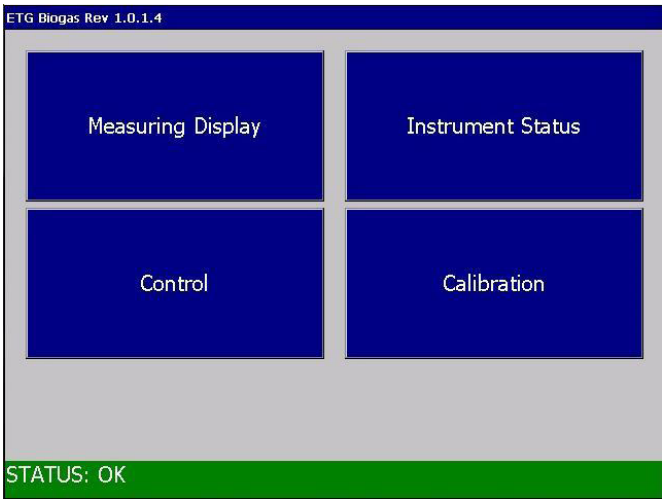

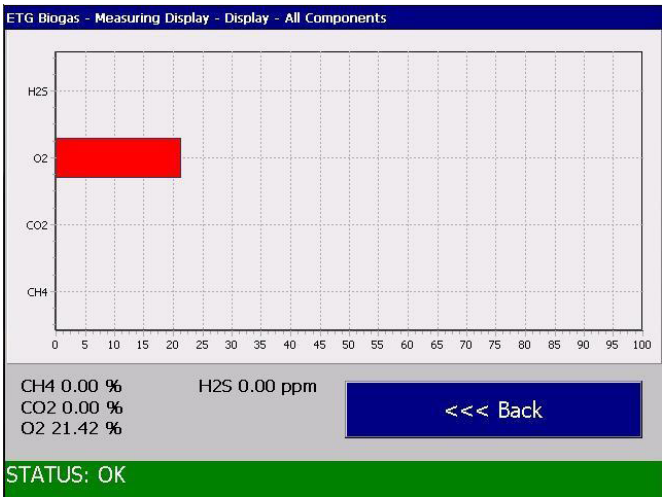

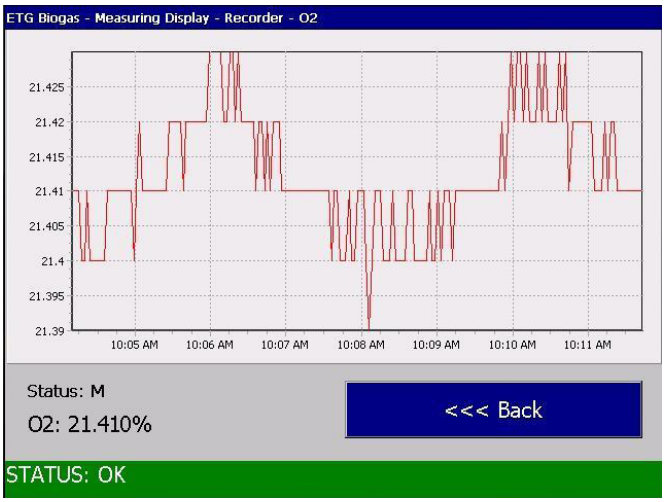

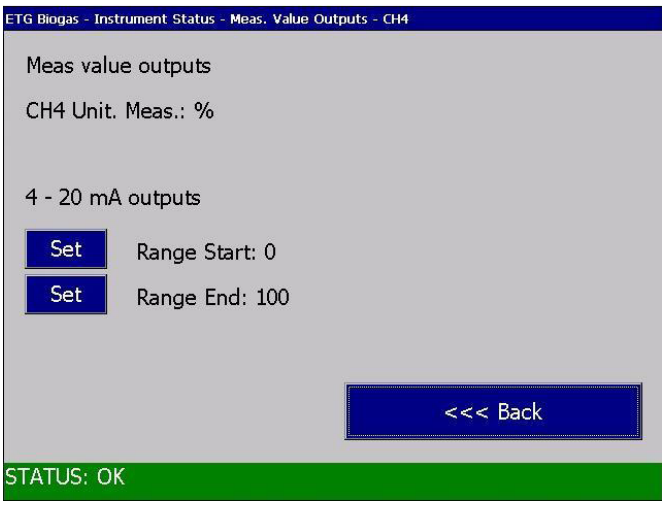

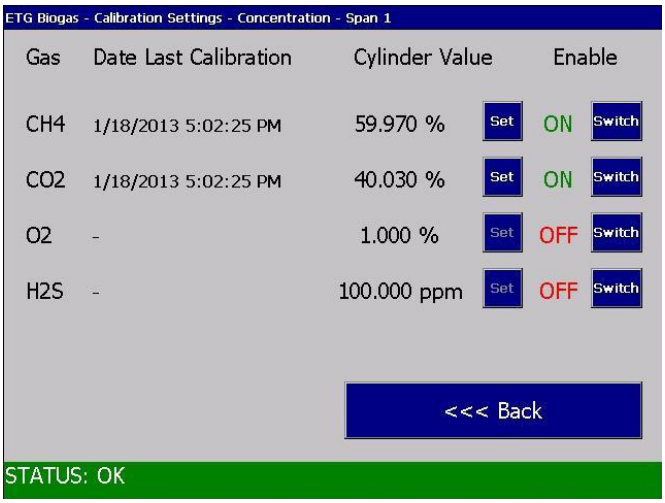

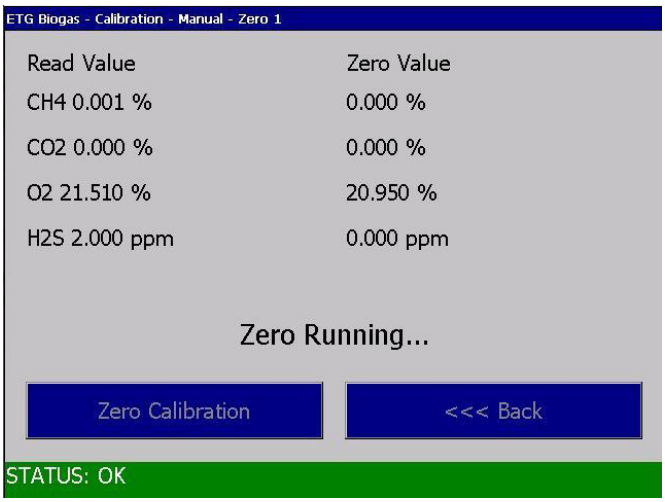

*software could be different for gas name and measurement range

MCA 100 BIO *MULTICOMPONENT ANALYZER FOR* ***BIOGAS***

SPECIFICATIONS

Response Time	Response times are specified at a sample flow rate of a 1 liter per minute through the MCA 100 sample cell
Data Refresh Rate	1 second
Warm-up Time	30 seconds ready,3 minutes useable,30 minutes to full performance
Operating Temperature	0 ° to 70 °C (32 ° to 158 °F)
Operating Humidity	To 95% RH (Non-condensing)
Operating Altitude	-300 to 3.000 m (-1.000 to 10.000 ft)
Communications (optional)	Ethernet – Profibus – Modbus
Analog Signal Output	4-20 ma for each measured compound
Digital Output	Configurable for gas concentration, analyzer fault, high temperature, etc..
Monitor	Touch Screen 5.7” Resistive type
Calibration	Zero & span user selectable. Automatic calibration (optional)
External Electrical supply	from 100 to 240 Vac 47-63 Hz
Pneumatic connection	Rapid fittings 6.0 OD 4.0 ID
Mechanical dimensions	132,5 x 495,0 x 430,5 mm
Weight	15.75 Kg

PNEUMATIC/ELECTRIC

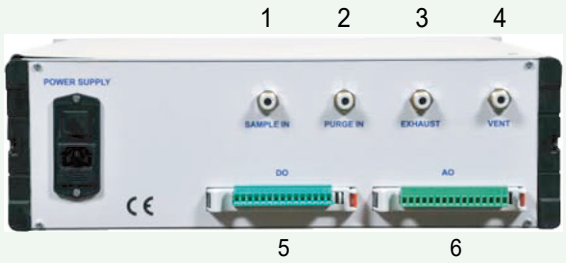

1	
2	Purge In
3	Exaust
4	Vent
5	Digital Out
6	Analog Out

MECHANICAL DIMENSIONS

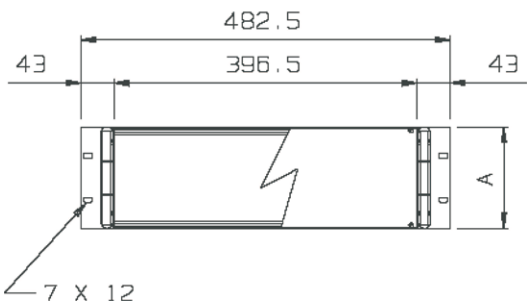

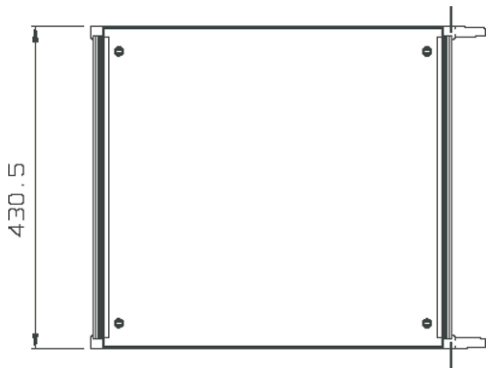

OTHER VERSION OF BIOGAS ANALYZERS

- Wall mounting Biogas analyzer version model 6500
- Portable Biogas analyzer model 3200 P

Rev. 3.0 - 2016

ETG RISORSE E TECNOLOGIA

Made in ITALY